TALRIK JUNIOR™ ASSEMBLY MANUAL

by
Keith L. Doty

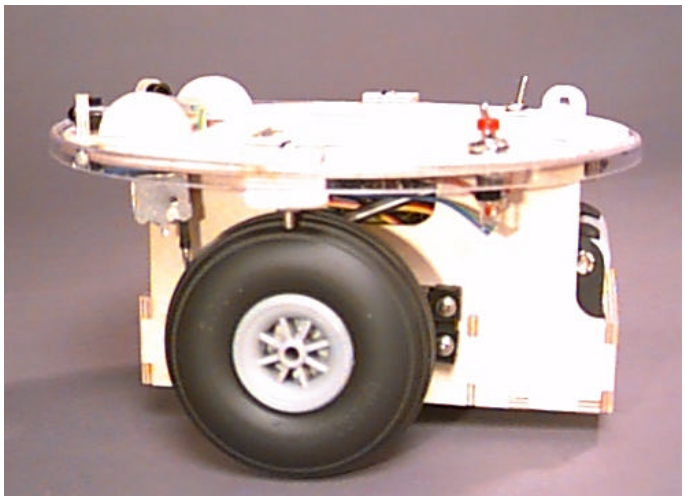

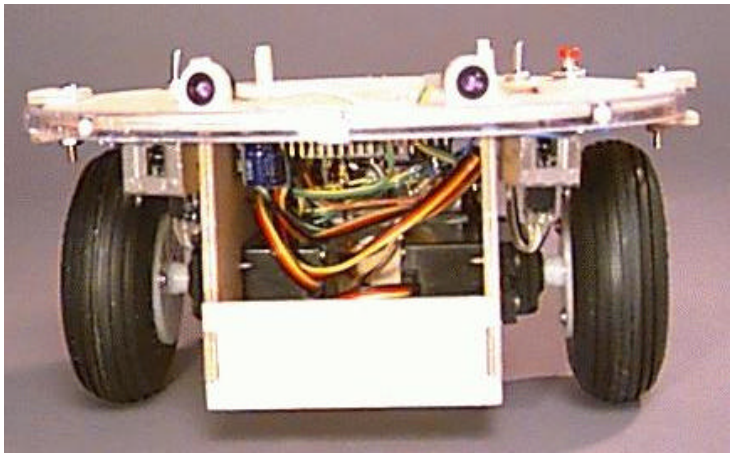

Gainesville, Florida Technical questions: mekrobotek@aol.com

AGREEMENT

This is a legal agreement between you, the end user, and Mekatronix™. If you do not agree to the terms of this Agreement, please promptly return the purchased product for a full refund.

1. **Copyright Notice.** Mekatronix™ hereby grants to any individuals or organizations permission to reproduce and distribute copies of this document, in whole or in part, for any personal or non-commercial educational use only. This copyright notice must accompany any copy that is distributed.

2. **Copy Restrictions.** Other than cases mentioned in **Copyright Notice**, no part of any Mekatronix™ document may be reproduced in any form without written permission of Mekatronix™. For example, Mekatronix™ does not grant the right to make derivative works based on these documents without written consent.

3. **Software License.** Mekatronix™ software is licensed and not sold. Software documentation is licensed to you by Mekatronix™, the licensor and a corporation under the laws of Florida. Mekatronix™ does not assume and shall have no obligation or liability to you under this license agreement. You own the diskettes on which the software is recorded but Mekatronix™ retains title to its own software. You may not rent, lease, loan, sell, distribute Mekatronix™ software, or create derivative works for rent, lease, loan, sell, or distribution without a contractual agreement with Mekatronix™.

4. **Limited Warranty**. Mekatronix™ strives to make high quality products that function as described. However, Mekatronix™ does not warrant, explicitly or implied, nor assume liability for, any use or applications of its products. In particular, Mekatronix™ products are not qualified to assume critical roles where human or animal life may be involved. For unassembled kits, you accept all responsibility for the proper functioning of the kit. Mekatronix™ is not liable for, or anything resulting from, improper assembly of its products, acts of God, abuse, misuses, improper or abnormal usage, faulty installation, improper maintenance, lightning or other incidence of excess voltage, or exposure to the elements. Mekatronix™ is not responsible, or liable for, indirect, special, or consequential damages arising out of, or in connection with, the use or performances of its product or other damages with respect to loss of property, loss of revenues or profit or costs of removal, installation or re-installations. You agree and certify that you accept all liability and responsibility that the products, both hardware and software and any other technical information you obtain has been obtained legally according to the laws of Florida, the United States and your country. Your acceptance of the products purchased from Mekatronix™ will be construed as agreeing to these terms.

NETWORK SITE: http://members.aol.com/meksales

Gainesville, Florida Technical questions: mekrobotek@aol.com

MANIFESTO

Mekatronix™ espouses the view that the personal autonomous agent will usher in a whole new industry, much like the personal computer industry before it, if modeled on the same beginning principles:

- Low cost,
- Wide availability,
- Open architecture,
- An open, enthusiastic, dynamic community of users sharing information.

Our corporate goal is to help create this new, exciting industry!

Gainesville, Florida Technical questions: mekrobotek@aol.com

TABLE of CONTENTS

LIST of FIGURES

1. TALRIK JUNIOR™ (TJ™) TECHNICAL SPECIFICATIONS

The following paragraphs provide a brief description of TALRIK JUNIOR™'s technical characteristics. A photograph of TJ™ appears in Figure 1.

1.1 Mechanical Structure

1. All of TJ™'s body parts are made from beautiful, strong, durable, 1/8 inch thick, 5-ply, birch model airplane plywood.
2. TJ™ fits into a right circular cylinder 7inches in diameter by 3.25 inches high. (Volume approximately 125 cubic inches or 0.072 cubic feet)

1.2 Power Requirements

1. Six AA rechargeable Nickel-Cadmium batteries (ENERGIZER™ or EVEREADY™), 600 ma-hr, 5.4- 7.2 volts (Sold separately).

WARNING!

USE ONLY NiCd BATTERIES FOR TJ™. DO NOT USE ALKALINE OR OTHER BATTERY TYPES WHICH WILL DESTROY THE ROBOT ELECTRONICS.

2. Recharger, 12 volts D.C. rated at 200ma (Sold separately).

1.3 Actuation

Gearhead DC motor drive for each wheel.

1. 5.4- 7.2 Volts
2. 100 -120 ma under load, 80 ma no-load
3. 1.25 revolutions/sec at 7.2 volts (full battery charge). Speed decreases proportionally to the voltage as it drops.

1.4 Robot Controller

1. MC68HC11E2 (256 Bytes of RAM, 2K of EEROM)
2. 5 Volt regulator
3. Low voltage inhibit reset circuit
4. 3-Pin Male Headers (Ground-Power-Signal Rails) for connecting sensors and motors. User expandable.

1.5 BasicSensor Suite

1. Two Forward Looking IR Emitters, wavelength equals 940nm.
2. One Backward Looking IR Emitter, wavelength equals 940nm.
3. Two Forward Looking IR Detectors for 40KHz modulated 940nm IR.
4. Three Front bumper Momentary Tactile Switches
5. One Back Bumper Momentary Tactile Switch
6. User expandable.

1.6 Switches

1. Reset push button
2. Toggle switch: Download Program and Run Program
3. Toggle switch: Off-On.

1.7 System Support Software

TJ programs can be written in MC68HC11 Assembly Language, C, or BASIC.

1. Sensor and motor routines provided in assembly language.
2. PCBUG11 freeware for downloading Motorola S19 files.
3. Freeware version of Basic for programming TJ.
4. Freeware MC68HC11 Assembly Language.

Separate purchase of a commercial C compiler is also available. Contact us for more information.

1.8 Applications Software

Mekatronix™ provides a BASIC program that allows TJ to explore his environment and avoid bumping into things, most of the time! If TJ does bump into something, his bumpers tell him and he moves away.

You can develop your own applications, limited only by your imagination and 2KB of memory!

1. Make TJ™ do figure eights, or any other shape, while at the same time avoiding people and furniture.
2. Program TJ™ to be an artist who draws on cardboard with a pen attached to his body (pen holder not included) (Be sure TJ stays on the cardboard!).
3. Design an obstacle course for TJ to learn.
4. Scare TJ by blasting him with your TV remote!
5. Write a program so TJ will be attracted to your TV remote!
6. Control TJs behavior with your TV remote…an IR controlled vehicle!
7. Get two or three TJs and program them to follow each other in single file.
8. Get three TJs and teach them to flock like goslings as they move around together.

To develop your applications requires communications between a Personal Computer and TJ. The additional purchase of an MB2325 communications board and a 6-wire RS-232C communications cable will provide the hardware for that capability. Only one MB2325 board and cable is necessary to enable you to sequentially load and download any number of Mekatronix™ robots, since the MB2325 board can remain attached to the PC and not the robot.

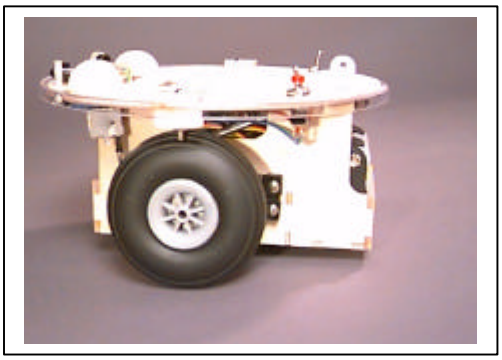

Figure 1 A minimum TJ™ platform with bumper.

2. INITIAL CONSIDERATONS

2.1 What is in your TALRIK JUNIOR™ Expert Kit?

The contents of your TALRIK JUNIOR™ expert kit appear in Table 1 and Table 2 The following sections describe each of the subkits.

Table 1 TALRIK JUNIOR Expert Kit

Part	Quantity
MSCC11 Circuit Kit	1
TALRIK JUNIOR Kit Bag	1
TALRIK JUNIOR Plywood Body	1
Wood Floating Ring Bumper™	1
Servos plus Mounting Hardware	2
Wheels plus Servo Horns	2
TJ Distribution Software	2

Bag

2.2 Circuit Board Assembly

Assemble and test the MSCC11E2 circuit board first. A separate assembly manual is provided for the MSCC11E2. Section 2.3 provides some of the MSCC11E2 information for your convenience.

Caution: TALRIK JUNIOR™ possesses a MC68HC11 processor which is static sensitive.[1] *Do not touch this part without being properly grounded. Static discharge can destroy it. Avoid working on carpet and do touch a grounded metal object before touching any of the electronics.*

Table 2 TALRIK JUNIOR Kit

Component	Quantity
IR Detectors	2
IR LEDs	3
LED Mounts	4
Red LED	1
Bump Switches	4
Toggle Switches	2
Reset Button	1
Charge Jack	1
1/2" 4-40 Screws	6
# 4 Nuts	14
# 4 Lock Washers	2
Single Row Female Header(36-Pin)	2
Single Row Male Header (4-Pin)	1
Shrink Wrap 3M MW 1/4"	25mm (1")
64-Wire Ribbon Cable	225mm (9")
Battery Holder (6-AA)	1
9V Battery connector	1
Skid	1
150 Ohm Resistor	2
220 Ohm Resistor	1
470 Ohm Resistor	1
10K Ohm Resistor	3

[1]TALRIK JUNIOR and TALRIK are trademarks of Mekatronix Corporation.

2.3 TJ™ 's Single Chip Microcomputer Circuit

The Mekatronix Single Chip Computer (MSCC11), incorporating an MC68HC11E2 as the on-board processor, serves as TJ™'s controller . To communicate code and data between the MSCC11E2 and a personal computer requires the Mekatronix Bidirectional Serial Communications Board (MB2325) [See http://member.aol.com/meksales] and Motorola's PCBUG11 freeware. The MSCC11, which measures about 2.4 inches by 2.4 inches, constitutes a completely functional microcontroller useful for a wide variety of embedded applications. The MSCC11E2 provides 2Kbytes of EEROM, more than enough to program TJ™ to do incredible stuff.

Table 3 lists the MSCC11 parts and Figure 2 illustrates those parts.

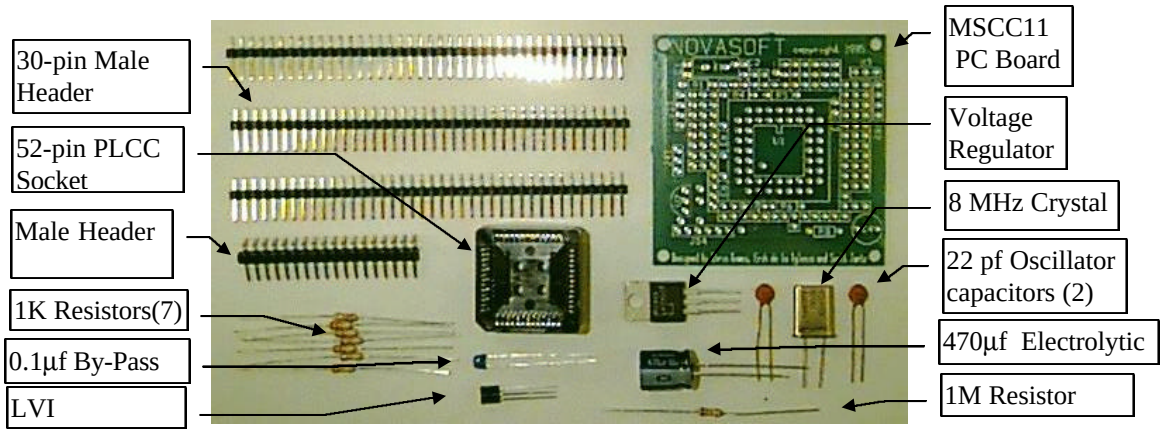

Figure 2 The MSCC11 parts inventory: 3 30-pin male headers in the upper right.

Table 3 MSCC11 Parts List

Label	Value	Component Description
C1-C2	22pf	Capacitor
C3	0.1µf	Capacitor
C4	470mf	Electrolytic capacitor (Polarity marked correctly in Fig. 1, but incorrectly on some PC boards.)
J1-J16	3 files of single row Male Headers	Power(middle rail), Ground (outer rail), Signal for digital/servo output (inner rail, processor pins 9 to 16 and 35 to 42). Mounted as required by the user's application.
J38	2 pin Male Header	MODE B jumper
J39	2 pin Male Header	MODE A jumper
J42	3 pin Male Headers	VRH A/D voltage reference high pull up
J43	3 pin Male Headers	VRL A/D voltage reference low pull down
J41	3 pin Male Header	Jump 5 volt regulated power to Port B and Port C Power Rails
J44-J51	3 pin Male Headers Constructed from male header strips	Analog/Digital-Input for sensors on PortE . A 3 pin header consists of a processor PortE pins 43 to 50 (inner rail), V_{dd} (middle rail) and ground (outer rail).

J52	4 pin Male Header	Power Connector
J53	4 pin Male Header	Select regulated power or alternate power source For J1-J16
J54	6 pin Male Header	RS232C Serial communication pins
PLCC	Socket	52 pin plastic leaded chip carrier for microprocessor
R1	10MΩ	Resistor
R2-R8	10KΩ	Resistor
U1	MC68HC11	Microprocessor IC
U2	MC34064	Low voltage inhibit IC
U3	LM2931T	5 volt regulator
X1	8MHz	Crystal
F1X30	Female Connect. x 2	Cut to make various connectors (TJ only).

2.4 Functional Description of the Single Chip Computer

The MSCC11E2 on TJ™ features (Figure 3) 1) eight 3-wire inputs (5volts, ground, analog signal) on Port_E via connectors J44 through J51, 2) eight 3-wire powered digital outputs on Port_B via connectors J9 through J16, and 3) eight 3-wire powered bidirectional digital signals on Port_C via connectors J1 through J8. A number of jumpers provide a variety of options for the user. Jumpers can separate unregulated and regulated power rails. Specifically, TJ™ employs the unregulated voltage power rail to drive the wheel servos attached to Port_B (See Figure 10). The regulated voltage rail always drives the microcontroller and the eight powered digital/analog inputs attached to Port_E. Up to eight 3-wire powered analog sensor connectors may be attached directly to Port_E. A 6-pin male header permits the MSCC11E2 to serially communicate with other MSCC11s or personal computers via a 6 wire cable to the bidirectional serial communications board (MB2325). The 6-pin male, serial communications header is mounted underneath the MSCC11E2 circuit board in order to make it easily accessible during program development.

2.5 Single Chip Computer Circuit Schematic

Figure 3 illustrates the MSCC11E2 circuit diagram and
Figure **4** the circuit layout on the printed circuit board. Refer to this figures in the following discussion. The MSCC11E2 possess a 5 volt regulator (U3) and a Low Voltage Inhibit device (U2) in addition to the central processor. A key feature of the circuit is that all computer Ports are brought out to male headers whose pins are indicated in
Figure **4**. To reduce clutter, only pin 9 in the upper left of
Figure **4** illustrates the multi-pin male header numbering scheme. Only the processor pins on the other headers, the inside pins, are labeled and are considered to have the suffix *-1*. As one moves outward from the processor pin, on the same header, the suffix become *-2* then *-3*, if there is a second and third pin. For three pin male headers, pin *N-2* is connected to power and *N-3* to ground when used. These male headers enable you to create and easily connect your own sensors to TJ™ 's brain.

The 6-pin male header J54, used for 5volt serial communication, is mounted on the underside of the printed circuit board, the side opposite from the other components.

Warning: Do not connect a standard RS232-C cable to this connector. The voltage specified for RS232-C will destroy the electronics.

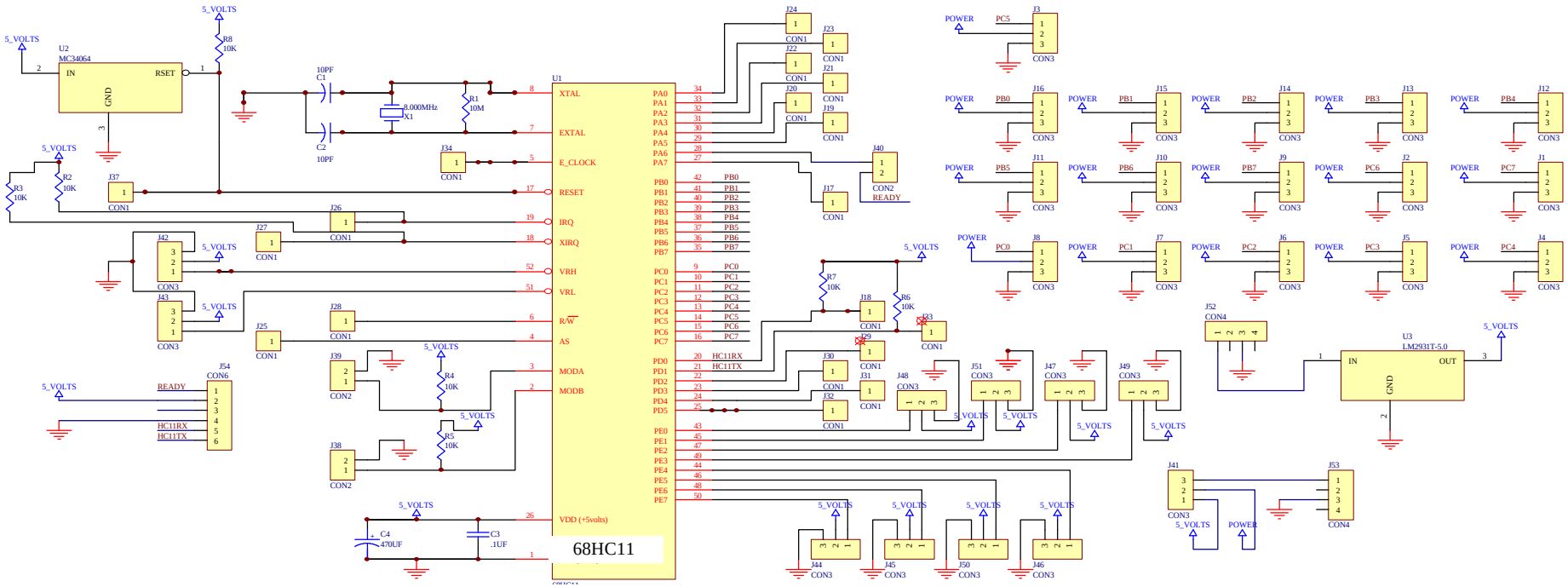

Figure 3 Schematic of the MSCC11.

Gainesville, Florida Phone (407) 672-6780

Jumpers J42 (VRH) and J43 (VRL) permit you to establish different voltage reference levels for the A/D converter. The RS232 6-wire cable connects to J54 and permits serial communication with the processor. Jumpers J38 and J39 allow you to control the processor mode upon reset. The usage of these and other jumpers in TJ™ are illustrated in Figure 10.

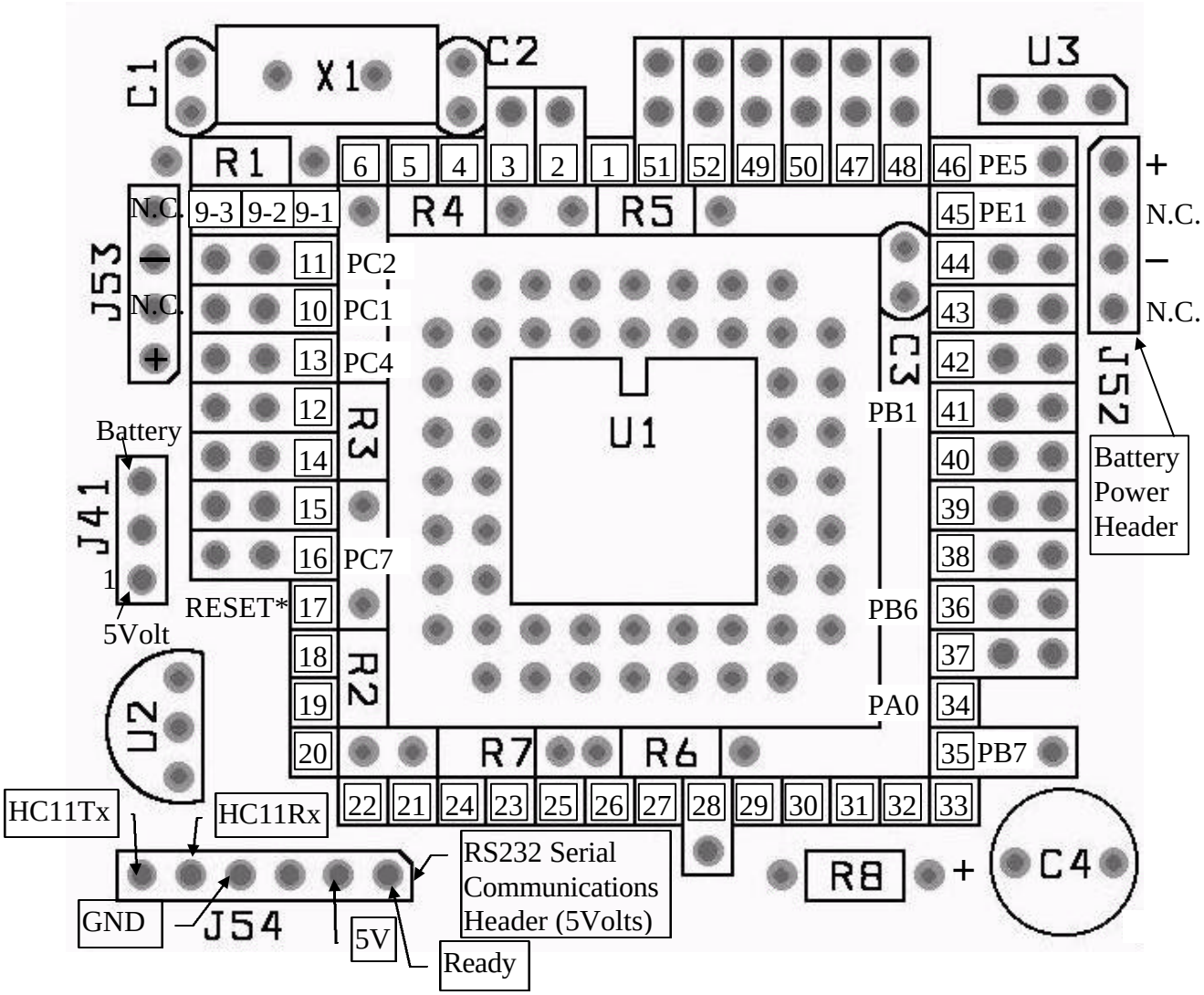

Figure 4 Layout of the MSCC11E2. Pin numbers refer to MC68HC11 pins.

2.6 Wiring

All TALRIK JUNIOR™ wiring harnesses should be with multi-stranded colored wire. Ribbon cable is quite useful for making wiring harnesses. Figure 5 and Table 4 illustrate the common cable types used in TJ™'s construction. The cable type *FnWkFm* refers to a cable with *k* wires. The wires are connected to an *n*-pin female connector at one end and to an *m*-pin female connector at the other end, $n \leq k$, $m \leq k$. If a designator is missing, the corresponding component is missing. For example, W2F4 is a cable with two wires connected to a 4-pin female connector at one end only, as illustrated in Figure 5. Table 5 lists recommended cable code and lengths. Although you need not stick to the color code, systematic color coding may help you maintain the robot. The suggested lengths may be longer than needed. You can, of course, cut the cable lengths to suit your requirements.

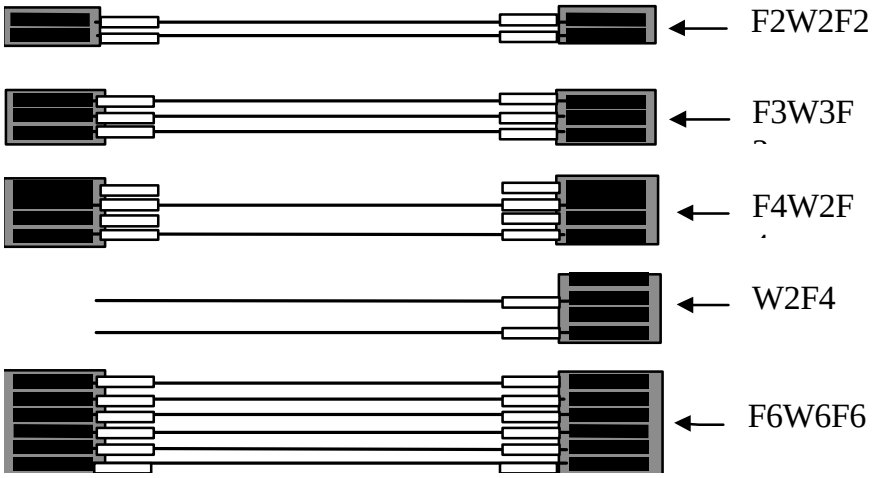

Figure 5 Illustration of several cable types.

Table 4 Cable Types

Cable Type	Description
F2W2F2	Two stranded wires connecting two 2-pin female connectors.
F3W3F3	Three stranded wires connecting two 3-pin female connectors.
F4W2F4	Two stranded wires connecting two 4-pin female connectors. Every other pin is connected.
F6W6F6	Six stranded wires connecting two 6-pin female connectors.

Female connectors can be cut from a multi-pin female connector. When making cables, be sure to tin the wire and connector ends before soldering. After soldering, cover the exposed wires with hot glue to provide mechanical strength. For additional strength you can place heat shrink tubing over the connectors and wires.

Broken wires on connectors can be a source of frustration and error. Unplug the appropriate cable and check for continuity when errors arise relating to the components connected.

Table 5 Recommended Cabling Color Code

Cable Description	Color Code	Cable Type	Length	Qty
Battery Power	(Power, NC, Ground, NC) = (Red, NC, Black,_NC) (Snaps to Battery Pack)	Snap_ W2F4	6in (150mm)	1
IR detectors	(Black, White, Gray) = (Ground, 5V, Signal)	F3W3F3	6in (150mm)	2
IR emitters: 3 LEDs in series with a 220 Ohm resistor.	(Yellow, Green)	F2W2	6in (150mm)	3
Bumper: 3-pin Connectors with 10K Ohm wired between signal and power.	Front Bumper: (Blue, Violet) Back Bumper: (Blue, Violet)	W2 _____ F3W2	4in, 3in (100mm) 4in (75mm)	1,2 ___ 1
6-Wire Serial Communication; Keyed	(Brown, Red, Orange, Yellow, Green, Blue) = (Jumper, Power, N.C., Ground, 5V Serial Receive, 5V Serial Transmit)	F6W6F6	6ft (1800mm)	1
Motors and Servos	(Black, Red, Yellow) = (Ground, 5V, Signal)	F3W3	Fixed	2
On-Off Circuit	(5Volt, Ground) = (Red, Black)	W1, W1	2.5in	4
Reset Switch	(Green, Blue)	W2	3in	1
Download-Run Sw	(Orange, Yellow)	F2W2	2.5in	1
Charge Jack	(5Volt, Ground) = (Red, Black)	W1,W1	2.0in	2

2.7 Connectors

You can buy slim connectors with 0.100inch centers, or make them from 0.100inch center male headers and female connectors. A keyed connector can be made in several ways. One method is to make the mating male and female ends with an extra pin and hole, one more than necessary for the wires in the cable. The extra header pin is clipped off and stuffed into the corresponding hole. The stuffed pin blocks the hole from any insertion except where the cut off pin matches. Of course, the location of the cut off pin should not be at a symmetrical position on the connector, otherwise a 180° twist will permit the connector to fit as well. For the IR detectors, one orientation works and the other does not. While annoying, because the robot does not respond to an incorrectly connected IR detector, no damage to the IR detector has been observed. We suggest, however, you keep to a color-coded scheme to help eliminate this annoyance, or, better yet, devise a keyed connector.

Hand made plugs using male headers and female connectors should be mechanically strengthened by coating the soldered wire connections with hot glue. This stabilizes the wires, preventing them from moving back and forth and easily breaking connection.

3. TJ™'S MECHANICAL STRUCTURE

A schematic of TJ™'s structure appears in Figure 6. TJ™'s wheel axis determines the robot's left-to-right axis. The diameter perpendicular to the wheel axis determines the front-to-back axis. The battery carrying space identifies the rear end of the robot.

Corresponding IR Detectors and emitters, those oriented in roughly the same direction, must be mounted on opposite sides of the top plate. The basic TJ™ possess two forward looking IR emitters, mounted in the front eyelets on top of the plate, and two forward looking IR detectors mounted underneath the front of the top plate, next to the sides. A third IR emitter mounts in an eyelet underneath the top plate and points back. An optional third IR detector can be mounted above the back IR emitter.

The MSCC11E2 printed circuit board (pcb) mounts on the top plate with four ½" 4/40 machine screws. Three hex nuts on each screw serve as spacers between the pcb and the top plate. These nuts keep the six pins of the Serial communications port from projecting above the top of the plate and presenting a puncture hazard to human body parts! The screws themselves screw snugly into the wood surface of the top plate, flush with the top surface. Because of the small tolerances, the screws securely fasten the pcb to the top plate without nuts on top of the plate.

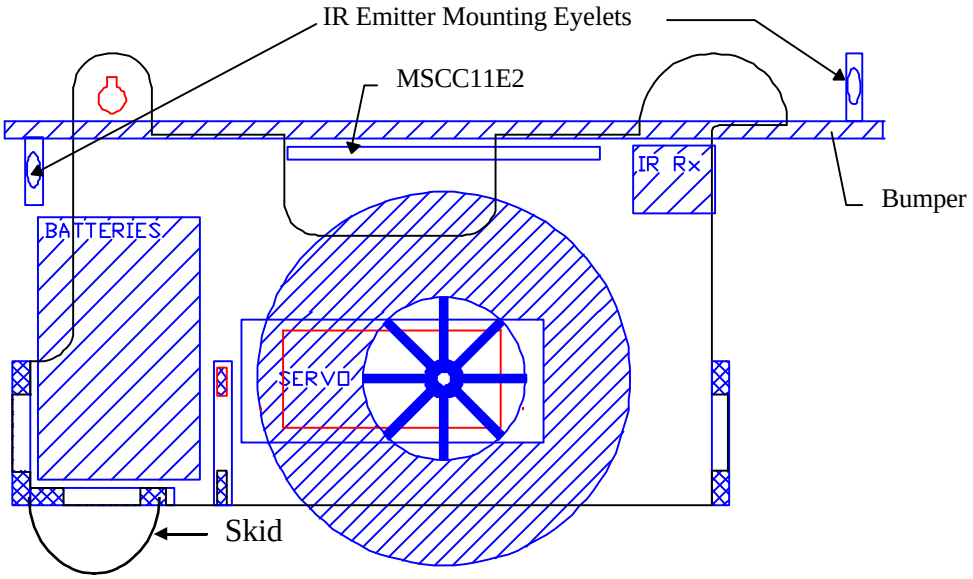

Figure 6 Schematic side view of TALRIK, JR.™

The circular top plate (Figure 7) mounts on the sides similar to a reverse automobile engine hood. The rectangular slots with rounded corners are used for wire conduits.

Two front slots on the top plate slip onto the "goose" necks of each side. The circular plate should be perpendicular to the floor for initial insertion of the goose necks. Holding the plate firmly against the vertical ends of the front end of the side pieces, the plate can be slowly rotated 90 degrees toward the rear as you release the pressure holding the plate vertically. Two slots in the rear of the plate slide over the tabs with keyed circular holes. A wooden key can be slipped through the tab holes to lock the top plate into place.

TJ™ possesses three switches mounted on the top plate in the rear (Figure 7), 1)*Off/On*, 2) *Download /Run*, and 3) *Reset*. In the *Download* position, the *Download /Run* switch forces the processor in *special bootstrap* mode upon reset. When the processor is in *special bootstrap* mode you can download programs. In *Run* mode the processor changes, upon reset, to *single chip* mode and executes the downloaded program.

The recharge plug is located just to the right of the *DOWN-LOAD/RUN* toggle switch.

In addition to the control switches, three bumper switches mount on the front edge of the plate and one on the back edge (Figure 7).

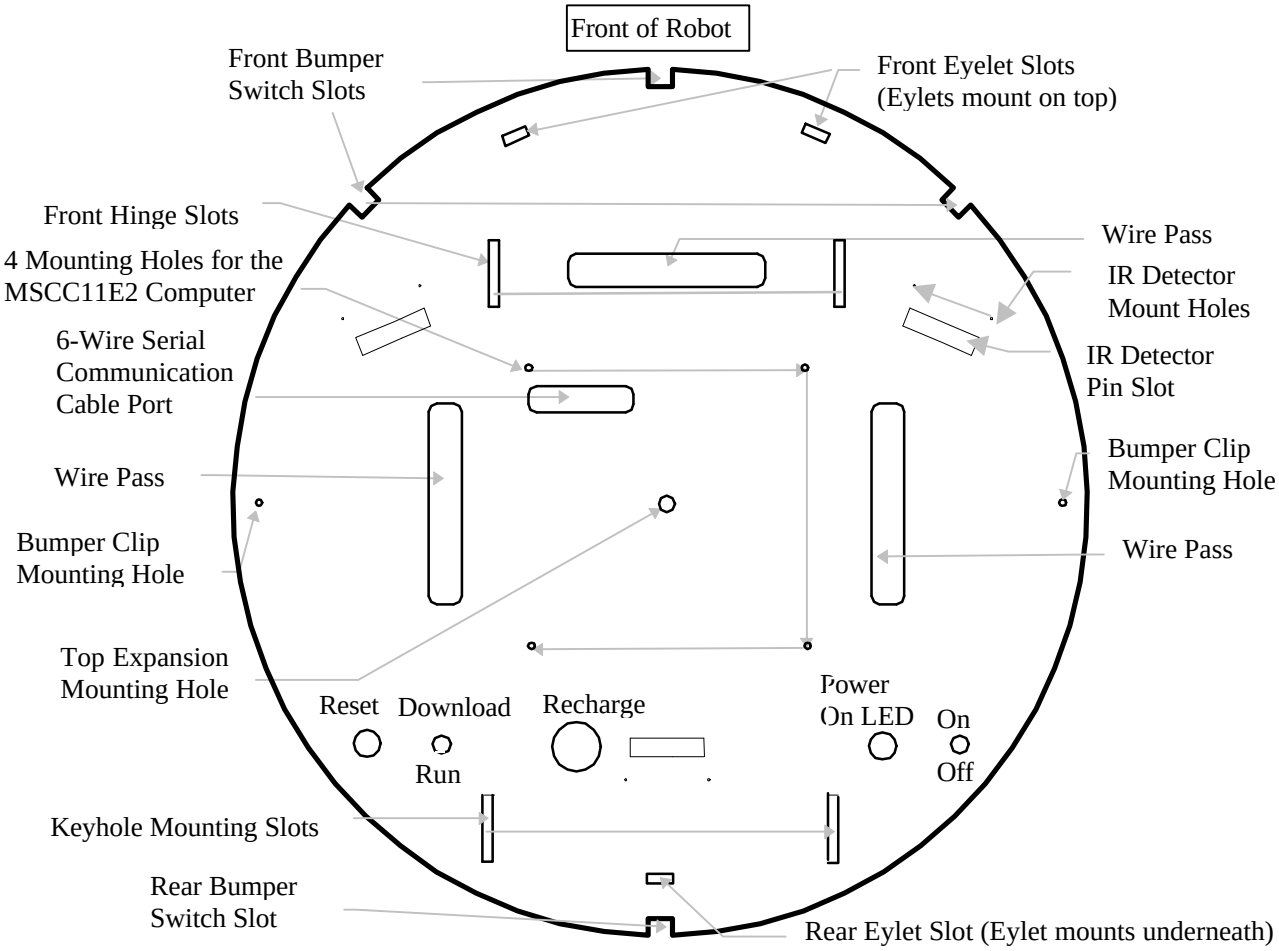

Figure 7 Layout of TJ™'s Top Plate.

Each side supports a servo and wheel assembly. The servos slide into the large rectangular opening in each side's center. Four small cross planks, one in front, one in back, one underneath in back, and one inserted between the sides, a little more than an inch from the rear end, hold the sides rigidly apart and simultaneously provide a battery case for the 6 AA battery pack above the nylon skid.

3.1 TJ™'s Body Parts

Figure 8 illustrates the ten wooden, structural components of TJ™'s body to scale. The list in Table 6 specifies TJ™'s body parts, the quantity employed in constructing a TJ™ frame and the function of each part. The plastic tailskid is listed as well (See Section 6.3).

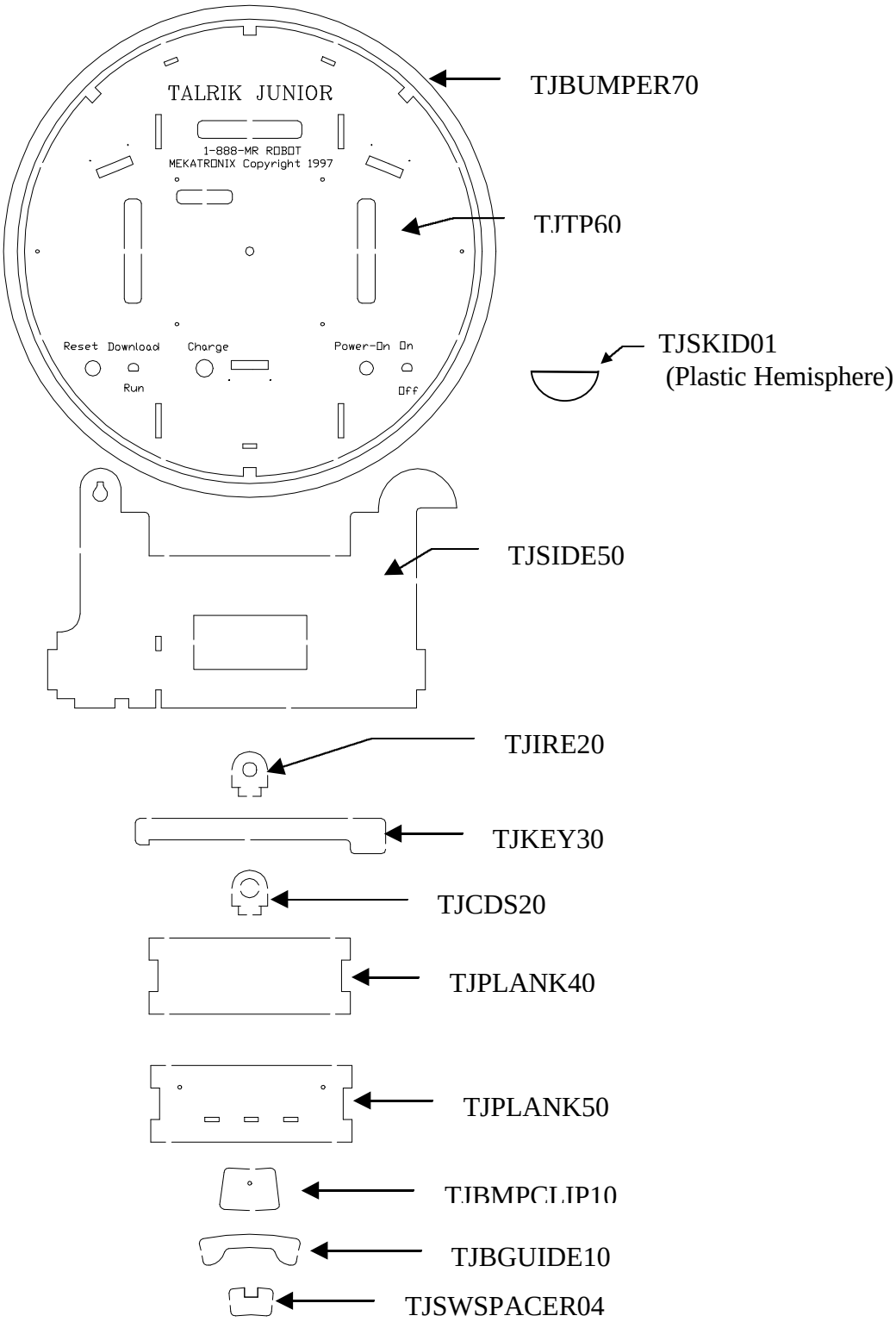

Figure 8 TJ™'s Body Parts

Table 6 TJ Body Parts

Qty	Part Number	Description	Function
4	TJBMPCLIP10	Bumper Clips	Clamps bumper to top plate.
2	TJBGUIDE10	Bumper guides	Keeps bumper from lifting up and off.
2	TJBMPSPACER15	Bumper Clip Spacer	Compensates bumper clips for thickness of bumper.
*	TJCDS20	TJ CdS cell Holders	Mounts for CdS cells (expansion kit only)
3	TJIRE20	TJ IR Emitter Holders	Mounts for IR emitters
1	TJKEY30	TJ Key, Top Plate Clamp	Locks top plate (TJTP60) onto the frame.
3	TJPLANK40	TJ Cross Planks	Holds two sides of the chassis together.
1	TJPLANK50	Front Plank	Fastens front together. Holes for mounting CdS cells and TJ sensor expansion board
2	TJSIDE50	TJ Side	Sides of robot. Servo mounts.
4	TJSWSPACER4	Bumper Switch Mount Spacers	Supports bumper switches.
1	TJTP60	TJ Top	Mounts switches, IR, bumper and other features.
1	TJBUMPER70	Floating Ring Bumper™	Bumper
1	TJSKID01	Plastic Skid	Back Skid.

3.2 TJ™ Platform Assembly

The completed platform assembly is shown in Figure 9a with the key inserted and the top plate locked in place. The IR emitter mounting eyelets, two in front and one in the back, show clearly in Figure 9b and Figure 9c. The bumper mounting clips, fastened to either side of the top plate, also stand out. Figure 9d illustrates how the top plate (Figure 9f) slips onto the goose necks.

The completed frame in Figure 9e shows how the plate and sides come together.

a)

b)

c)

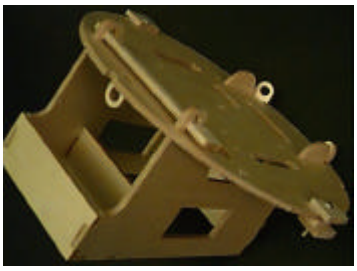

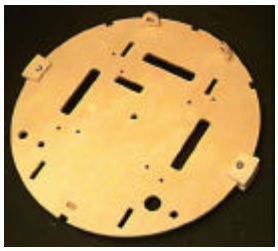

d) e) f)

Figure 9 Sequence of photographs of TJ™'s mechanical structure viewed from a) right side, b) right rear side, c) rear, d) rear with top plate swiveled up. Figure e) shows the chassis as viewed from the rear top and f) pictures the top side of the plate.

4. TJ™'S SENSOR SUBSYSTEM

Figure 6 and Figure 7 schematizes the standard layout of TJ™'s sensor suite. Table 7 defines the name and application of each sensor. TJ™ is not limited to these applications, or in the number of sensors listed. You can devise and implement other schemes, both in layout and in function.

Table 7 TJ™'s Sensor Suite

TJ™ Label	Name	Function
IRDLF	Infrared Detector, Left Front	Proximity Sensor
IRDRF	Infrared Detector, Right Front	Proximity Sensor
FBSWLF	Front Bumper Switch, Left Front	Front contact Sense
FBSWCF	Front Bumper Switch, Center Front	Front contact Sense
FBSWRF	Front Bumper Switch, Right Front	Front contact Sense
RBSW	Rear Bumper Switch	Rear contact Sense

The next section describes how the circuits that must be wired to connect the sensors to the MSCC11E2 microcomputer.

4.1 Interconnection of Standard Sensor Circuits

A few discrete circuit elements (switches, resistors, LEDs, wiring and shorting jumpers) must be connected to various male headers on the MSCC11E2. The function and interconnection of these components are illustrated by the circuit diagram in Figure 10.

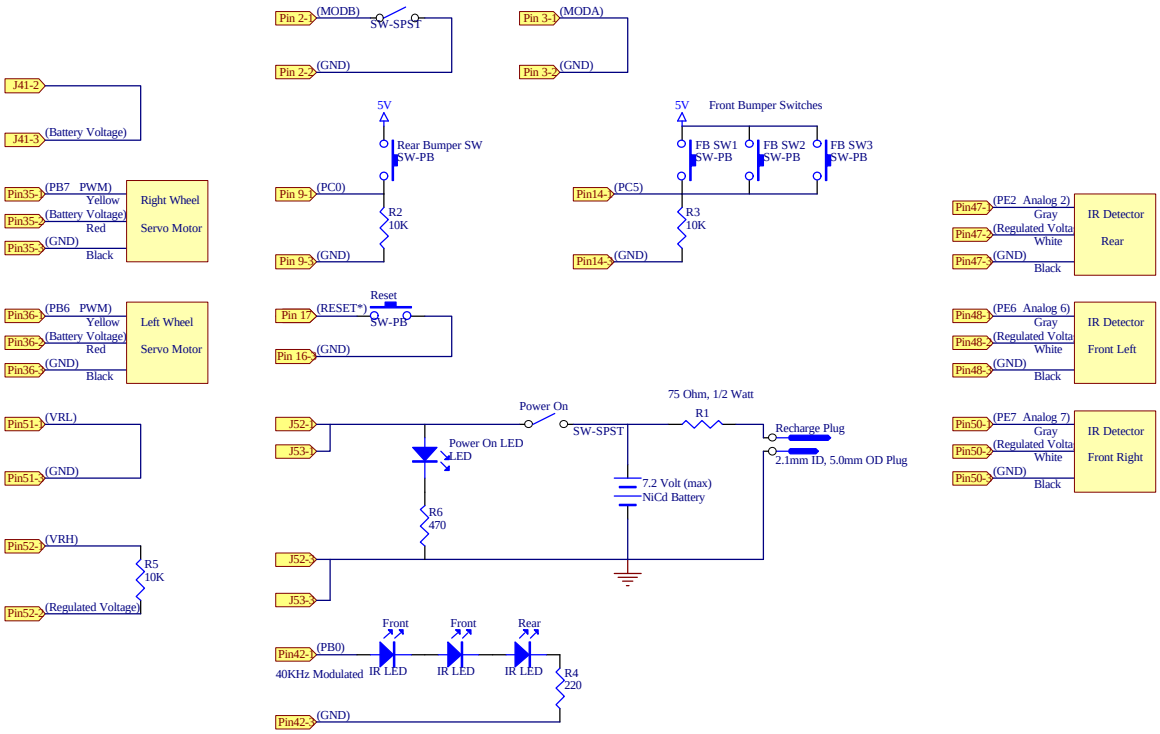

Figure 10 Peripheral circuitry to connect to the MSCC11.

The three front bump sensors tie into one digital input variable and the rear bump sensor into a single digital input. At the insignificant cost of more resistors and wiring, you can wire each switch to a separate digital input to enable TJ™ to determine an individual, or a combination of simultaneous, bump switch closures. This feature provides TJ™ with quite a capable somatic ability.

4.2 TJ™ 's IR Sensory Capability

The MC68HC11E2 processor provides 8 channels of 8-bit A/D (Port E) for sensory inputs. Port B furnishes 8 digital outputs and Port C can be programmed for either inputs or outputs.

The TJ™ depicted in Figure 1 possesses two forward looking and one backward looking IR emitter to illuminate the scene with 40KHz modulated, 940nm IR. PB0 drives all three of these emitters in 2.5 ms bursts (refer to the series LED circuit in Figure 10). During the 2.5ms, the processor is totally dedicated to modulating the 40 KHz bursts. A 220 ohm resistor in series with the three IR emitters limits the current.

Two forward looking, 40KHz, analog IR detectors (MIR58Y40A), complete the IR proximity detection system used for obstacle avoidance, wall following, and beacon detection.

The two front IR detector outputs feed into analog inputs PE6 and PE7 (Figure 10). An optional rear IR detector driving analog input PE2 allows TJ™ to detect IR from other TJ™ s (or predators!) following behind.

4.3 Analog Hack of the Digital IR Detector

The IR detectors operate as digital devices and must be converted to analog devices. This hack applies to the SHARP GPIU58X or the GPIU58Y.These two parts possess identical electrical characteristics. The three leads of the GP1U58X project from the back of the can in line with the viewing lens. Those of the GP1U58Y project perpendicular to the viewing lens, allowing for easy printed circuit board mounting. The unmodified Sharp has only a single digital output pin. This signal is taken from a Schmitt trigger in series with a 40KHz bandpass filter and signal amplifier. An integration element (0.1µf capacitor) is applied before the Schmitt trigger.

Gain access to the Sharp miniature, internal, printed circuit board by carefully bending the lower lid back. Careful! Bending the lid too many times will cause the metal to fatigue and break, thus, eliminating the lower part of the faraday cage protecting the device from electromagnetic interference. Examine the exposed side of the Sharp printed circuit board. Refer to Figure 11 in the following discussion.

Place the can so that the wires point toward you (GP1U58X) or up toward you (GP1U58Y). Cut the trace to the output pin (leftmost inside pin). Soldered 30 AWG wire directly to the top of the 0.1 microfarad capacitor on the lower left and to the output pin. Solder the ground pin on the far right to the case with a small piece of wire and a large blob of solder. Be sure to make a good connection. The output pin will now give the analog response. For practicality, it is much easier to solder to the capacitor terminal than the trace itself. Now, close up the can. The hack is complete.

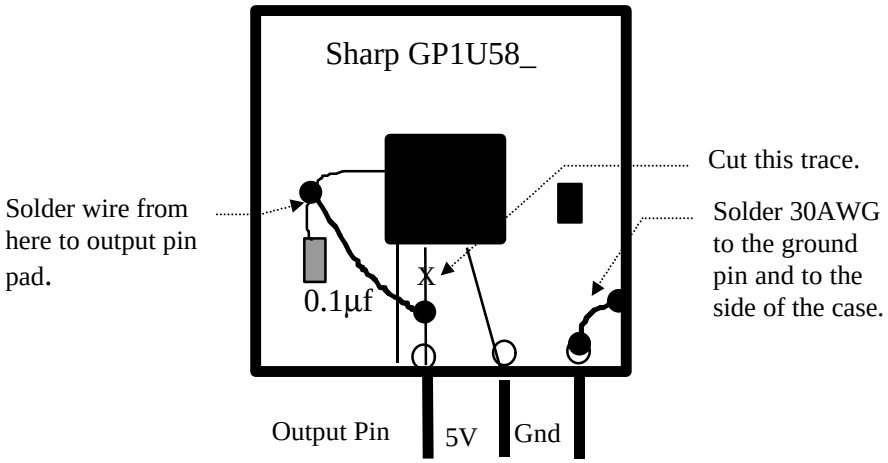

Figure 11 Converting a digital IR sensor to an analog IR sensor requires cutting the trace to the Output pin, soldering the Gnd pin to the side of the case, and connecting the output of the 0.1 µf capacitor to the Output pin.

The analog output voltage will vary from about 1.5 volts to 2.5 volts with a rise time of about 100ms and a fall time of about 50ms. The processor A/D converter will typically provide digital outputs in the range 88 to 130, yielding about 5 bits of precision.

The effective range of the hacked IR sensor depends upon the IR emitter illumination level and degree of beam collimation. With a current of 5ma through uncollimated IR emitters, the effective range varies from about 4 inches to 16 inches, ideal for proximity sensing.

4.4 Enhanced Sensory Capabilities

Other sensors, such as microphones, photoresistors and digital IR communications, can be added to TJ™ 's platform. The numerous sensory possibilities and add-on features are limited only by the input/output capability of the MSCC11E2 and your imagination.

5. MOTOR CONTROL

Programs executing on the MSCC11E2 control TJ™'s motors using pusle-width-modulation (PWM). For the software PWM program to work, however, one must first hack the servos.

5.1 Hacking the Servos into DC Gearhead Motors with Controllers

The standard MS410 servo can be hacked in the following manner to create a DC gearhead motor. Refer to Figure 12. Mount a servo horn on the output shaft and approximately rotate the servo to the center of its range. Remove the 4 back plate screws. Carefully remove the gear box cover on top. Remove the output gear and with

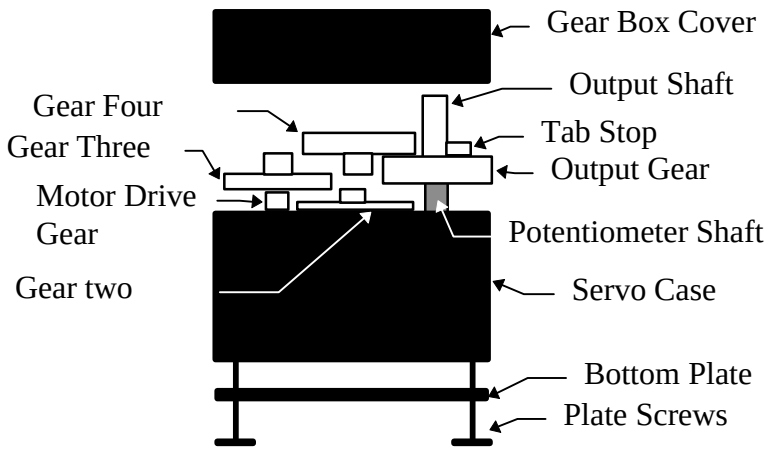

Figure 12 Servo hack: Remove tab stop, remove potentiometer tab inside *Output Gear*, set potentiometer shaft at center setting.

sharp, miniature diagonal cutters, cut off the plastic tab stop. Take the potentiometer lock-tab out of the output gear (Figure 13) so it will not turn the potentiometer shaft. Now, connect the servos to the MSCC11E2 (Figure 10). Flip the *Download-Run* switch to *Download*. Use PCBUG11 to load HServo.S19, a program to help you center the potentiometer setting. After loading HServo.S19, put *Download-Run* switch to *Run* and press *Reset* to execute the program. Manually adjust the potentiometer until the motor stops (In the rest of this procedure, avoid rotating the potentiometer shaft from its center position). Remount the output gear without the shaft-lock tab and reassemble the servo. This (almost) ruins the servo as servo, but in its place you have a DC gearhead motor with electronic control!

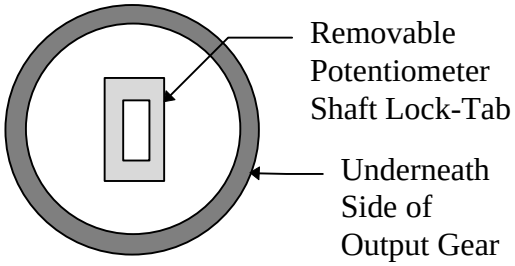

Figure 13 Illustration of the potentiometer shaft lock-tab inside the output gear.

5.1.1 MS455 Hack

The gear cover on top of the MS455 has separate screws from the bottom plate. This permits you to remove only the gear cover. Do not remove the bottom plate screws. Otherwise, the hack described for the MS410 is the same as for the MS455, but for one significant point. The ball bearings under the output gear and their raceways disassemble as you take the output gear off. Usually, the ball bearing grease keeps the bearings together or stuck to some other part of the gearbox. Nonetheless, be careful not to lose the tiny bbs. The outer raceway fits snugly into the underside of the output gear and must be gently removed. Be careful not to damage the raceway. Reassemble the bearing, be sure to place all the bbs between the raceways. At this point in the procedure, remove the potentiometer shaft-lock tab in the output gear and center the potentiometer shaft as described above for the MS410. Press the reassembled bearing inside the output gear. Reassemble the gear train and box. Close up the gear box to complete the hack.

The 3-pin female connector of the Mekatronix MS410 and MS455 servos slip right onto the Port_B male header of the MSCC11 single chip computer board without modification.

5.2 PWM of the Motors

Software generates pulse width modulation for the two DC motors on PB7 and PB6 of Port_B (Figure 10). The DC motors (MS410 or the premium MS455) output 42 oz.-in. of torque. A pulse width command of approximately 1.5ms will stop the motor. Actually, since the motors vary, the exact duty cycle for no motion should be determined experimentally. Duty cycles less than 1.5ms but greater than 1ms drive the motor in one direction and a duty cycle greater than 1.5ms, but less than 2ms drives the motor in the opposite direction. The PWM period can vary from 18ms to 20ms. Differential control of the motors provide complete maneuverability. TJ™ can literally turn 180 degrees in place.

6. ASSEMBLY SEQUENCE

In the following assembly process, you may need to refer periodically to various tables and figures already presented.

6.1 Unpack The Kit

Carefully unpack TJ™ and verify the presence of all the parts. Use Table 8, Table 9, and Table 10 to check off items. The plywood body parts of TJ™ are precut and are easily removed from the parts sheet (Figure 14). Three extra eyelets (TJIRE20) and three extra bumper clips have been provided for possible extended applications or replacement of lost or broken ones.

Table 8 TJ Body Parts (Refer to Figure **8**)

Qty	Part Number	Description	Function
4	TJBMPCLIP10	Bumper Clips	Clamps bumper to top plate.
2	TJBGUIDE10	Bumper guides	Keeps bumper from lifting up and off.
2	TJBMPSPACER15	Bumper Clip Spacer	Compensates bumper clips for thickness of bumper.
*	TJCDS20	TJ CdS cell Holders	Mounts for CdS cells (expansion kit only)
3	TJIRE20	TJ IR Emitter Holders	Mounts for IR emitters
1	TJKEY30	TJ Key Top Plate Clamp	Locks top plate (TJTP60) onto the frame.
3	TJPLANK40	TJ Cross Planks	Holds two sides of the chassis together.
1	TJPLANK50	TJ Front Cross Planks	Holds front sides of the chassis together. Three eyelet slots.
2	TJSIDE50	TJ Side	Sides of robot. Servo mounts.
4	TJSWSPACER4	Bumper Switch Mount Spacers	Supports bumper switches.
1	TJTP60	TJ Top Plate	Mounts switches, IR, bumper and other features.
1	TJBUMPER70	Floating Ring Bumper™	Bumper
1	TJSKID01	Plastic Skid	Tailskid.
6		4/40 Screws, ½ “	Mount MSCC11
14		Hex nuts	Mount MSCC11
4	T1-3/4	LED Panel Mounts	Holds IR emitters & Power on LED

Table 9 TJ Sensors, Switches and Motors

Qty	Part Number	Description	Function
2	MIR58Y40D	Digital IR Detectors, 40KHz, 940nm	Proximity sense. Must convert to Analog[2]
3	MIR27E	IR Emitters, 940nm	IR light projection
1	MVLED	Visible LED	Power-on Light
4	SWPBMT100	Tactile PB Switch	Bumper switches
2	SWTGM25	SPST Toggle Switch	On-Off and Download-Run
1	SWPBR	Push Button Switch	Reset switch

[2] Refer to Analog Sensor Hack on http://www.mil.ufl.edu/imdl/handouts/Sharp Sensor Hack for Analog Distance Measurement(postscript version only)

1	MPMJ21	2.1mm ID, 5mm OD DC Panel Mount Jack	D.C. Charger Jack.
2	TJDC410	Gear Head Motor, 6V, 42oz-in	Wheel actuators
1	W275T	Pair of 2.75” wheels	TJ’s Wheels.

Table 10 TJ Electronic Parts

Qty	Part Number	Description	Function
1	MSCC11E2U[3]	Single Chip Computer Kit, Unassembled	Computer control of TJ™
3	Resistor 10K	Resistors 10Kohm	Front and Back Bumper pull-down, VRH Pull-up
1	Resistor 470	¼ watt	On-Off LED current limiting
1	Resistor 220	¼ watt	IRE current limiting
2	Resistor 150 ohm	¼ watt	Charge current limiting, wired in parallel.
2	FC36	Female connector, 36pins	Make Jumpers & Connectors
1	BHS6AA	Battery holder, 6-Pack	Holds TJ™’s six AA NiCd Batteries.
1		Battery pack snap leads	Connects Battery to MSCC11
1	SMH4	4-pin straight male header.	Power Header (Glue to TJ plate. Battery plugs onto it)
1		9 inches of 40 wire ribbon cable	Miscellaneous wiring.

Table 11 TJ Documentation[4]

Qty	Part Number	Description	Function
1	ATJV1_Doc	TJ Assembly Manual	Instructions to Assembly TJ
1	AMSCC11V1_Doc	Assembly Manual for the MSCC11	Instructions to Assemble MSCC11
1	IRHACK_Doc	IR Analog Hack	Instructions to make a digital IR into an Analog IR.
1	TJDDV1	TJ Software Distribution Disk	Basic TJ device drivers, PCBUG11, Motorola MC68HC11 Assembler.

[3] The complete list of parts for the MSCC11E2 kit is listed in the assembly instructions for that kit.
[4] All the manuals are on line as postscript files or Word 7.0 files.

6.2 Assembling TJ™'s Body

Lightly sand the plywood sheet of precut parts (Figure 14) with the grain of the wood. Cut away TJ™'s parts from the sheet by cutting through the small retaining tabs. Sand or file tabs smooth and lightly sand the edges of each piece. TJ is now ready for gluing.

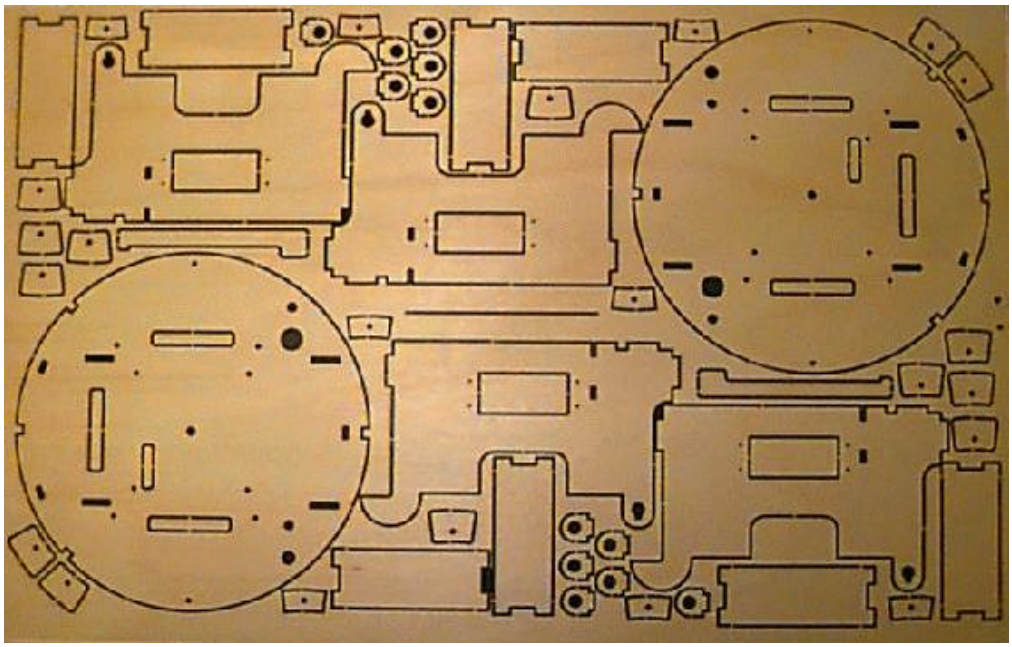

Figure 14 Two TJ cutouts on 5-ply model airplane birch plywood.

Refer to Figure 15. Use a quick drying wood glue (Zap-A-Gap™) to fasten the four cross planks (TJPLANK40, Figure 8) between the two side pieces (TJSIDE50, Figure 8). All the cross planks are identical, so the choice of plank depends upon the wood grain effect you want. One cross plank fastens in the front and one in the rear. The third one fastens inside the side planks just far enough from the end cross piece to allow a vertically standing 6-pack battery module to slip between them. The fourth cross piece provides a floor for the battery pack. The four horizontal cross pieces can be seen clearly in Figure 9e. The inside cross piece should be inserted first and glued simultaneously with the front and back planks. The bottom plank can be glued last.

Glue the three IR mounting eyelets (TJIRE20, Figure 8) on the top plate. Two fit above the plate, in the front slots, and one underneath the plate, in the rear slot (Figure 9b and Figure 9c). Glue the tailskid (TJSKID01, Figure 8) onto the bottom plank below the battery storage compartment.

TJ™'s body assembly is now complete.

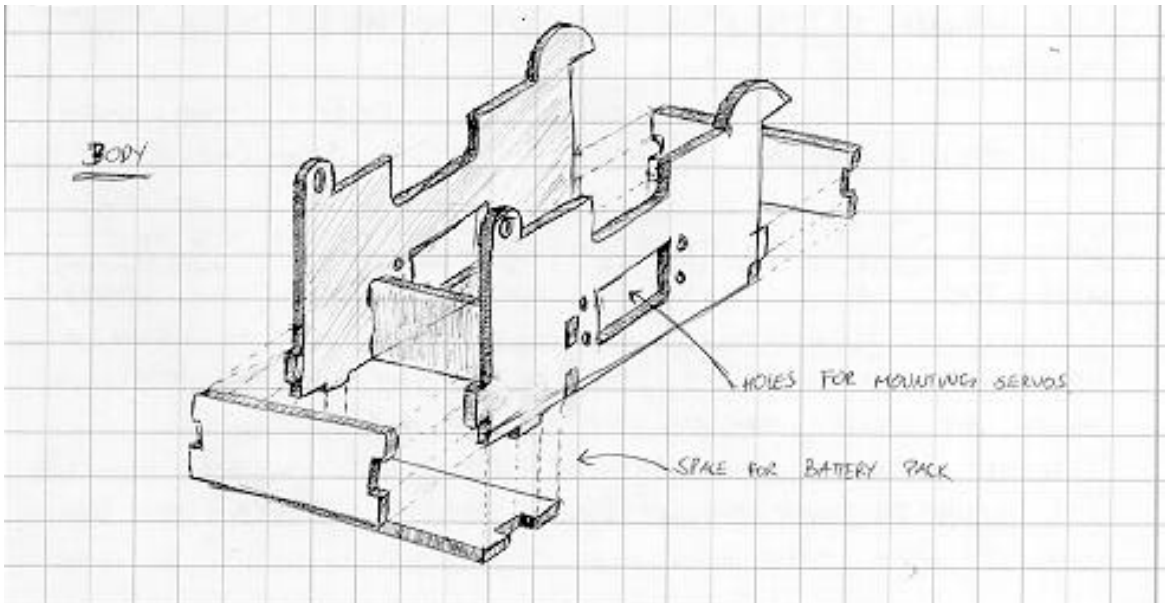

Figure 15 Sketch of TJ frame assembly showing how the four planks join the sides. (Drawing courtesy of Ivan Zapata).

6.3 Assemble the Floating Ring Bumper™

Figure 16 depicts a schematic diagram of TJ™'s wooden Floating Ring Bumper™. Refer to the TJ body parts in Figure 8 while assembling the bumper.

1. Glue the TJBGUIDEs, 180 degrees a part on the bumper. The tabs on the guides extend under the top plate (TJP60), but do not contact the switch spacers (TJSWSPACER). Use the top plate turned upside down for aligning the guides.
2. With the top plate upside down and the bumper guides resting on the undersurface, bolt bumper clips (TBMPCLIP) to either side with 4/40 screws and nuts. The head of the screw should show on the top of the plate (hidden from you if the plate is upside down) and the nut will attach to the screw on the underneath side of the plate.

6.4 Re-Mounting the Floating Ring Bumper™

The Floating Ring Bumper™ is properly mounted when assembled as instructed. Occasionally, after extreme abuse, the bumper comes off. To remount the bumper, simply remove the bolted side clips, bring the ring bumper up from the bottom of the robot, like slipping on pants, and place the bumper guides as shown in Figure 16. Remember the bumper guide fit underneath the top plate. Fasten the clips over the bumpers again and you are done.

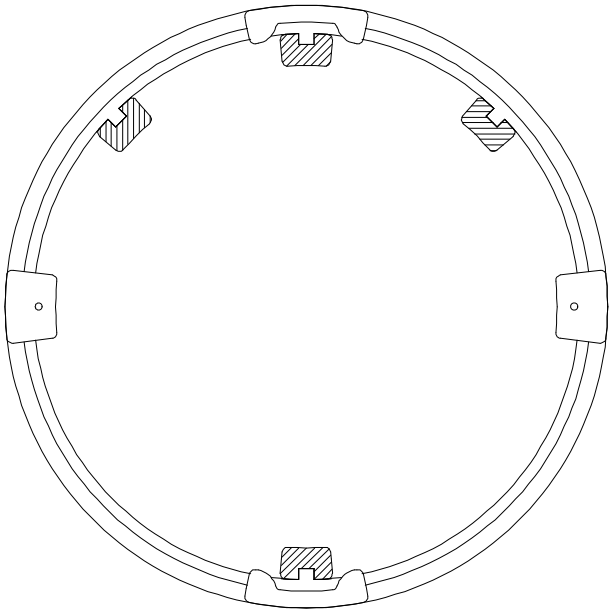

Figure 16 TJ™'s bumper assembly.

6.5 Finish Wood Surfaces

You should lightly sand TJ™'s wood structures using a very fine grade sandpaper. After sanding, we recommend clear-coating TJ to bring out the natural beauty of the wood. Of course, you can varnish, stain or paint wild color schemes to taste! All finishing should be performed before assembly, as the wires and electronic components prevent effective finishing later.

6.6 Mount Tailskid

The beige, hemispherical, plastic tail skid glues to the bottom plank, centered between the two sides and close to the edge of the plank.

.

6.7 Install the Microcomputer

The MSCC11E2 printed circuit board (pcb) mounts underneath the top plate. Four mounting holes are provided. The 6-pin serial communications header should be mounted on the non-component side of the MSCC11E2 pcb. A slot on the top plate provides access to this header. When mounting, offset the pcb from the top plate enough to recess

the serial communications header below the top surface of board. Three 4/40 machine nuts placed on the ½" mounting screws between the pcb and the top plate should be enough spacing. This keeps the header pins from sticking out above the surface of the top plate and will prevent injury to fingers or hands when picking up the robot. With this spacing the ends of the mounting screws should be flush with the top surface of the plate.

6.8 Install Mode and Reset Switches

1. Pass the two toggle switches through the holes provided for them (Figure 7). Thread the lock washer and nut on each. Tighten.
2. Do the same for the red push button switch and the recharge panel mount jack.
3. Wire the push button *Reset* and the *Download-Run* switches according to the circuit in Figure 10 and Figure 17. The power *On-Off* switch is wired in Section 6.9.

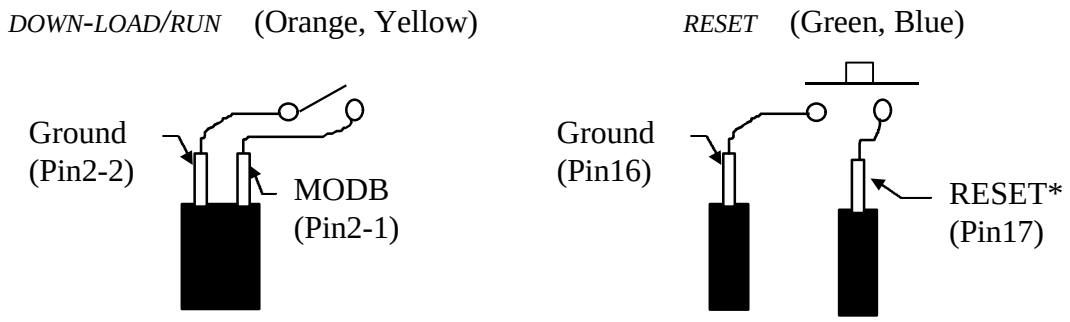

Figure 17 Connectors for the Download-Run and RESET switches.

The switches serve as controllable jumpers, so reversing pins 1 and 2 above does not change the function or cause any problems (Refer to Figure 7 for header connections).

6.9 Power- On LED and Recharge Jack

1. Push the black T1-3/4 LED mounting hardware snap-in clip into the hole provided for the Power-On LED (Figure 7). Insert the LED until it snaps into place. Place the black plastic ring over the back of the clip to lock the LED in place.
2. Pass the recharge panel mount power jack through the hole provided (Figure 7). Thread the lock washer and nut on each. Tighten.
3. Make a ½ watt, 75 ohm resistor by soldering two ¼ watt 150 ohm resistors in parallel.
4. Wire the LED, the 470 ohm resistor, the *On-Off* switch, the power jack, the male power header, snap connector, battery connector, and the constructed ½ watt, 75 ohm resistor according to the circuit in Figure 10 and depicted in Figure 18 and Figure 19. (Refer to Figure 7 for header connections). Suggested color: All lines that connect to battery plus, or connect to battery plus when the switch is closed, are Red. All ground connections are black.

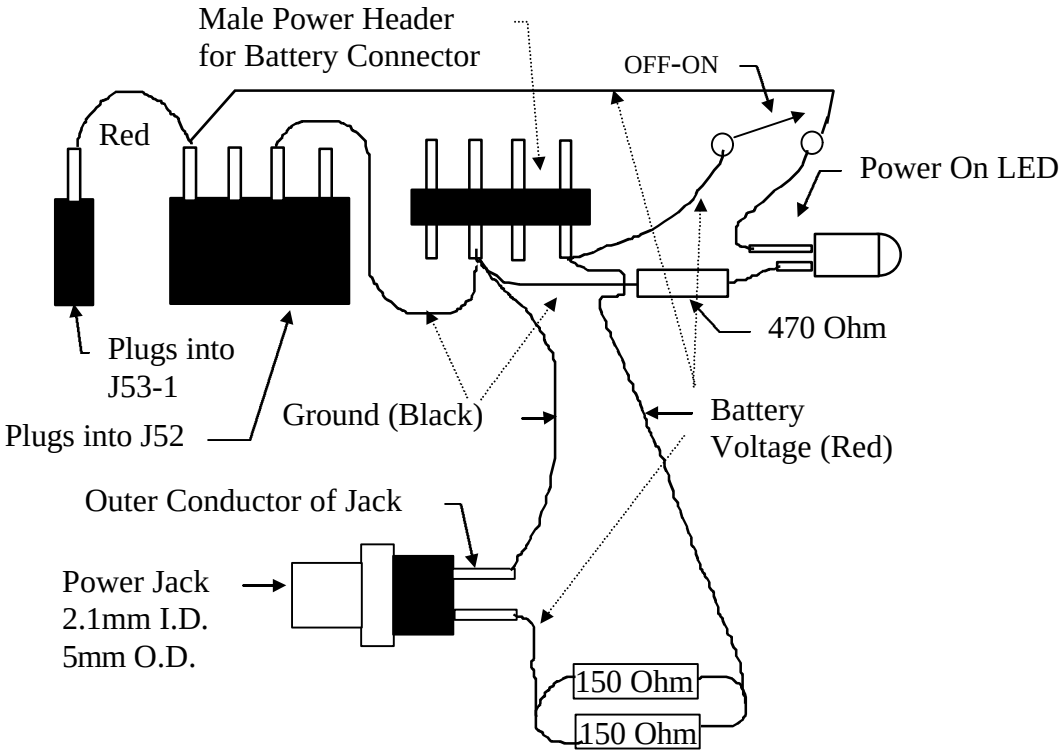

Figure 18 Power Off-On circuitry with male power header and recharge jack.

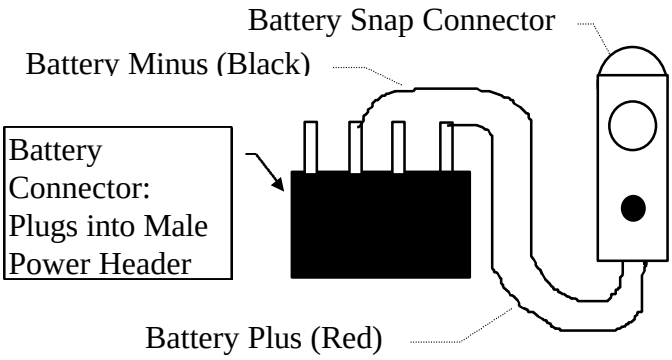

Figure 19 Battery pack snap connector cable.

6.10 Install Front and Back Bumper Switches

Insert the miniature tactile push button switches into the four slots provide for them around the periphery of the top plate (Figure 7). Orientation of the pins are important. From above the top plate you should see two pins attached to the same side of the switch (refer to Figure 20). Although you can center the switch in the slot and glue its back to the top plate, superior bumper performance results when the top surface of the switch is flush with the surface of the top plate. Be careful not to tilt the switch, keeping the button surface perpendicular to the surface of the plate to insure good contact with the bumper upon contact.
(For the following instructions, refer to Figure 7 for header connections).

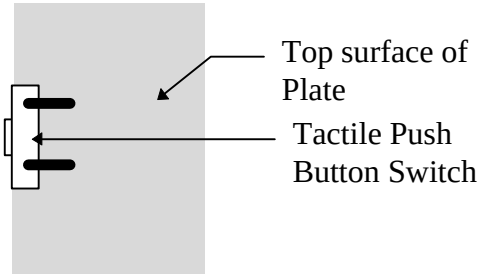

Figure 20 Pin orientation for bumper switches.

1. With Zap-A-Gap™, attach the small push button switches to the plate, 3 in front and 1 in back, as indicated in the above instructions.

Be careful not to glue the switches open or closed!
No wire connections are made to the two pins on top of the plate.

2. Wire the three front bumper switches in parallel (Figure 10). Suggested wire colors: (Blue, Violet).
3. Wire the rear bumper switch according to the circuit in Figure 10. Suggested wire colors: (Blue, Violet).
4. Make two three pin female connectors (Figure 21) with 10K ohms soldered between the two outside pins. Wire the three front bumper tactile switches in parallel and connect their common nodes to the three pin. The single back bumper switch is wired as shown.

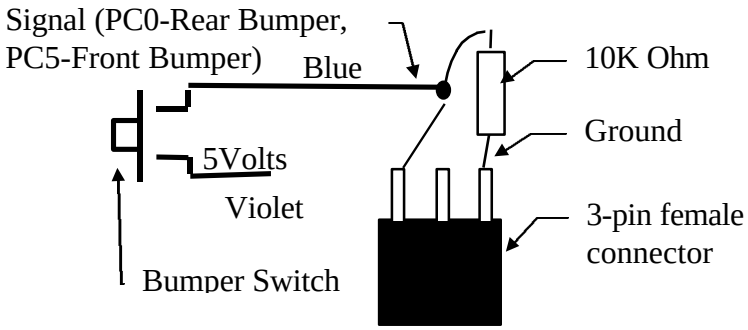

Figure 21 Three pin female bumper connector. Plugs onto MSCC11E2 male header.

Wire the bumpers to the connectors (Refer to Figure 7 for header connections).
(Colors: Blue, Violet):

1. Plug the front bumper female connector into PC5.
2. Plug the back bumper female connector into PC0.

6.11 Making MSCC11 Jumpers

You have already made various size female connectors by snipping the required number of pins from the larger female connectors . The same technique applies in making the jumpers for the MSCC11 board. Figure 22 and Figure 23 illustrate how to make the jumpers to connect Battery Power directly to the actuation power rail, to short MOD_A to ground, and to establish the A/D reference voltages: VRH=regulated 5V and VRL =GND.
(Refer to Figure 7 for header connections).

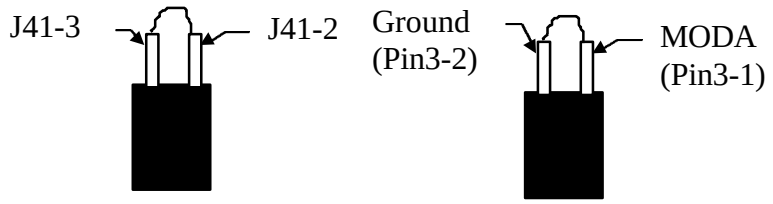

Figure 22 Shorting jumpers for placing battery voltage on the power rail and forcing MOD_A to ground.

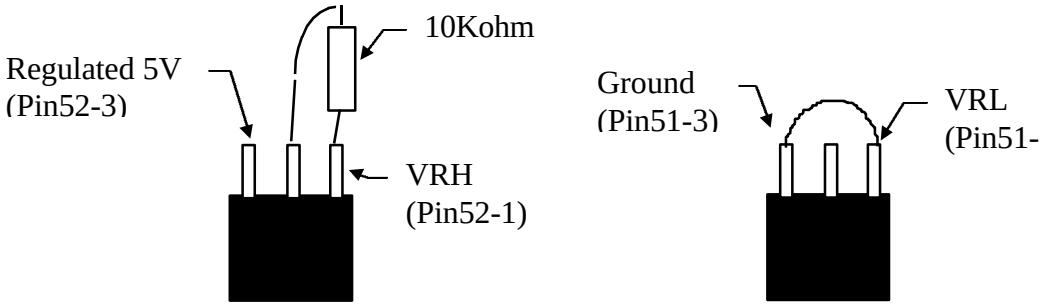

Figure 23 Jumpers for VRH=5V(regulated) and VRL=Ground.

6.12 Mount IR Emitters

Refer to Figure 24. Push the black T-1 ¾ LED mounting hardware snap-in clip into the two front and the rear eyelets (TJIRE20**,** Figure 8) provided for the IR emitters (Figure 9 b,c). Insert an LED into each eyelet until it snaps into place. Place about 8mm (1/3 inch) of shrink-wrap tubing over the back of the eyelet, completely covering it. Apply heat. As the shrink-wrap gets hot, use a pair of needle-nose pliers to squeeze it closed across the LED wires to form a seal against back lighting from the LED. Without a proper light seal the IR emitter will adversely affect IR Detector readings. The shrink-wrap will also lock the LED into place.

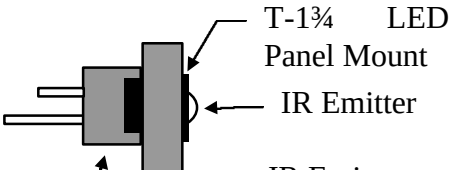

Figure 24 Mounting IR emitters into the IR emitter holders. In the above diagram, the black plastic T-1 ¾ panel mount pushes in from right to left. The LED is pushed in from left to right until it snaps into the flared part of the panel mount. The shrink-wrap slides onto the panel mount from the rear and locks the LED into place and seals the back when heat is applied and the shrink-wrap is pinched together while hot.

6.13 Wire IR Emitters

1. Make three, 2-pin female connectors for the three IR emitters (Figure 25).
2. Make a 2-pin female connector and insert a 220ohm resistor into it.
3. Wire the three IR emitter, 2-pin, female connectors in series with the 220ohm resistor-jumper constructed in step 1 (Refer to Figure 10 and Figure 25). Suggested colors: yellow and green wire.

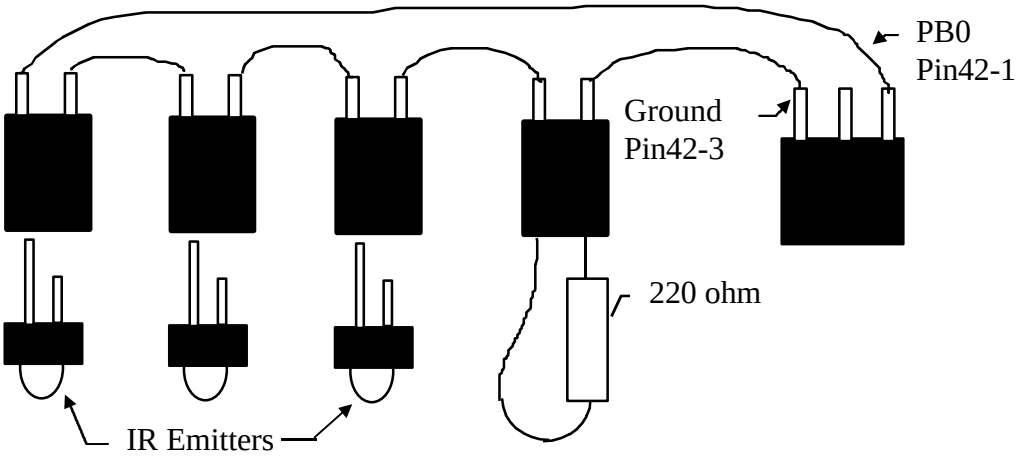

Figure 25 IR Emitter Circuit.

(Refer to Figure 7 for header connections).

6.14 Wire and Install IR Detectors

The two IR detectors (MIR58Y40A) mount on the underside of the top plate. The two IR detector mechanical mounting pins fit into the two small holes provided. With the 3 electrical pins of the detector aligned with the cutout hole, carefully press the square mechanical mounting pins into the round holes. This provides a secure fit for the detector. Gluing will not be necessary in most cases. If you take the detector out of the mounting

holes and remount several times, then gluing with hot glue may become necessary. This mounting precisely determines the IR detector geometry.

For each IR detector make a 150mm (6in.), 3-wire cable with three hole female connectors at each end (Figure 26). Color code: (Black, White, Gray) = (Ground, 5V, Signal). Connect these cables into the three pins of the IR detector at one end and the appropriate male header on the MSCC11E2 board indicated by the circuit diagram in Figure 10. (Refer to Figure 7 for header connections).

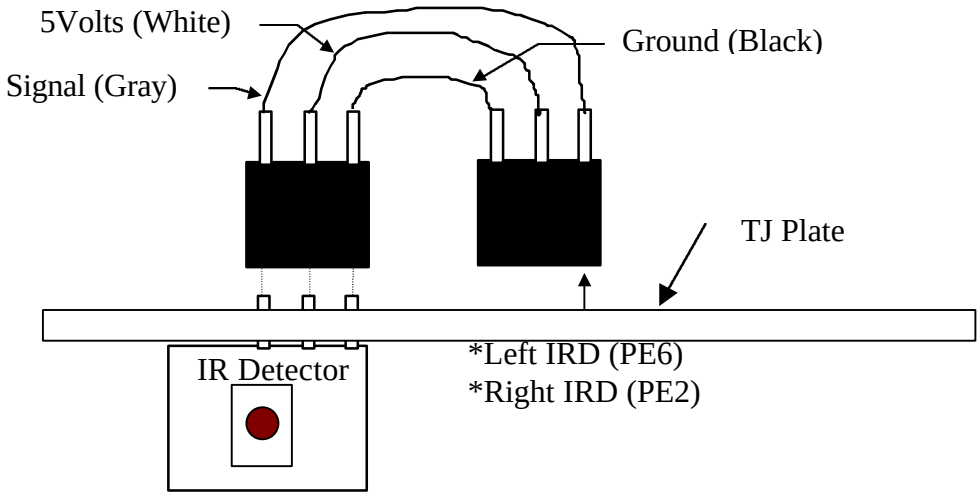

Figure 26 IR Detector Cabling.

One end of these cables fit into the IR detector cans. The black wire next to the edge of the can. The other end connects into the IRDT male headers on the MTSX01 board. On the MTSX01 assembly manual the Ground pins of each IRDT is specified. The Ground pin corresponds to the Black wire connector hole.

6.15 Mount Servo Horns on Wheels

The servo mounting hardware comes together in a cellophane package.

1. Mount the servo horns onto the wheels with two small horn screws as shown in Figure 28. Pilot holes for the screws can be conveniently created by pressing an awl into the wheel plastic at the desired locations or drilling holes about 1.5mm in diameter. The holes do not have to be too deep, since the screws are self threading through the plastic. Any of the common horns, a round plastic disc with holes or a plastic two, three, four, or six pronged horn can be used. Each horn has a center tap for mounting the horn on the output shaft of the servo. Be sure that the horn's center screw is in place before screwing the servo horn on to the wheel frame. This screw can be tightened or

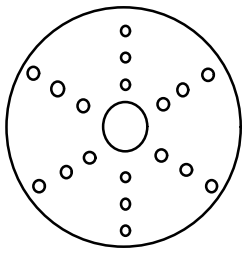

loosened by a small screwdriver whose blade will fit through the hole in the center hub of the wheel.

Figure 27 Round servo horn.

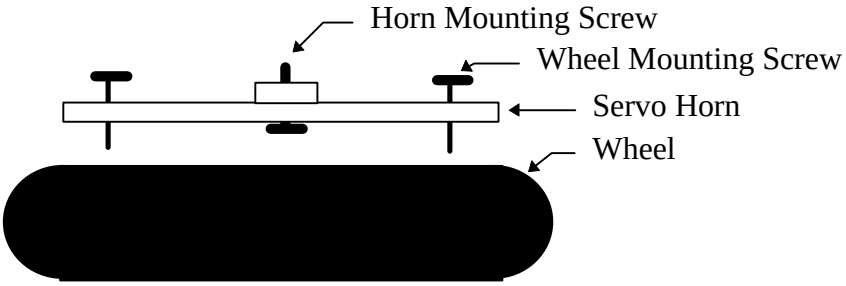

Figure 28 How to mount a servo horn onto a wheel. Be sure the horn mounting screw is placed into the horn before fastening the horn to the wheel with the other two screws.

Note: Be careful to mount the horn flat and parallel to the wheel frame, otherwise the horn will tilt when screwing it down and cause the wheel to wobble as it turns.

6.16 Mount Battery Pack

1. Load the six batteries into the battery pack. Be sure battery polarity is correct. ***Caution!*** *Incorrectly installed NiCad batteries can cause damage to the batteries and the electronics.*

WARNING!
USE ONLY NiCd BATTERIES FOR TJ™. DO NOT USE ALKALINE OR OTHER BATTERY TYPES WHICH WILL DESTROY THE ROBOT ELECTRONICS.

2. Snap the battery power cable on.
3. Assuming the MSCC11E2 boartd has been tested, connect the battery power connector into the male power header which was wired to J52 through the *OFF-ON* switch (refer to Figure 18).

6.17 Test IR Sensors

If the batteries are fully charged and/or TJ™ is connected to a charger, then run a demo program as explained in a *Read Me* file in *TJ™'s* software distribution disk. You can use the demo program to test the IR and bump sensors. Play with TJ™ for a while and observe how TJ™ perceives the world. The understanding gained by this exercise is invaluable for writing TJ™ programs that work.

6.18 Complete the Assembly

You have now completely assembled TJ™ and tested the electronics. Now its time to program him to do things!

Share with other TJ™ owners your experiences and programs via THE NET. Check ***http://members.aol.com/meksales*** for details.

Enjoy!